HC6-800 规格书 Specifications

电气参数 Ratings:

◇额定工作电压
Rated Operational Voltage: 1000V

◇额定工作电流
Rated Current: 630, 800A

◇额定绝缘电压
Rated Insulation Voltage: 1000V

◇额定冲击耐受电压
Rated Impulse Voltage: 8kV

◇额定接通能力
Rated Making Capacity: 10×Ie (AC-3) , 12×Ie (AC-4)

◇额定分断能力
Rated Breaking Capacity: 8×Ie (AC-3) , 10×Ie (AC-4)

◇极数
Number of Poles: 3P, 4P

认证/标准 Approvals/Standard:

◇CCC

产品特征 Features&Benefits:

模块化设计，产品结构紧凑
Modular design, compact product structure

操作性能安全可靠
Safe and reliable operation performance

特殊的触点工艺确保连续可靠的传导
The special process of the contacts ensures continuous and reliable conduction

安装方便，无需工具安装附件
Convenient installation without tools to install and remove accessories

多种接线端子可供选择，接下能力范围广
A variety of connection wire terminal options, wide range of wiring capabilities

更好的抗冲击性和抗震性能
Better impact resistance and seismic performance

防尘性能好，可选配防尘配件
Dustproof performance, optional dustproof accessories can be added

低功耗线圈
Low power consumption coil

产品型号说明 Product Model:

	HC6	-800	N	4	220V	50/60Hz
公司代码 Company Code						
额定电流 Rated Current	630=630A 800=800A					
特殊功能 Special Function	N: 水平联锁 Horizontal Interlocking L: 垂直联锁 Vertical Interlocking Nil: 非可逆接触器 Non Reversing Contactor					
极数 Poles	Nil: 3P 4: 4P					
控制回路电压 Control Circuit Voltage	24V 48V 110V 220V 380V 415V					
频率 Frequency	50Hz 50/60Hz 直流 DC					

特性参数 CHARACTERISTIC PARAMETERS				
产品型号 Product Model			HC6-630	HC6-800
约定自由空气发热电流 Conventional Free Air Thermal Current (Ith)	≤140°F (≤60°C)	A	1000	1000
极数 Poles			3	
额定绝缘电压 Rated Insulation Voltage (Ui)		V	1000	
额定冲击耐受电压 Rated Impulse Voltage (Uimp)		kV	8	
额定接通能力 Rated Making Capacity			接通电流 Marking Current: 10×Ie (AC-3), 12×Ie (AC-4)	
额定分断能力 Rated Breaking Capacity			分断电流 Breaking Current: 8×Ie (AC-3), 10×Ie (AC-4)	
电气寿命 Electrical Durability ×10^4	AC-3	Ops	20	15
机械寿命 Mechanical Durability ×10^4		Ops	100	100
最大操作频率 Maximum Operation Frequency		Ops/h	300	300
每极平均阻抗 (Ith及50Hz下) Average Impedance Per Pole at Ith&50Hz		mΩ	0.12	0.12
相匹配的熔断器 Matching Fuse Type			RT16-3	RT16-4
熔断器电流 Fuse Current		A	630	800
自带辅助触头数量 Auxiliary Contact Composition			-	
安装位置 Installation Position			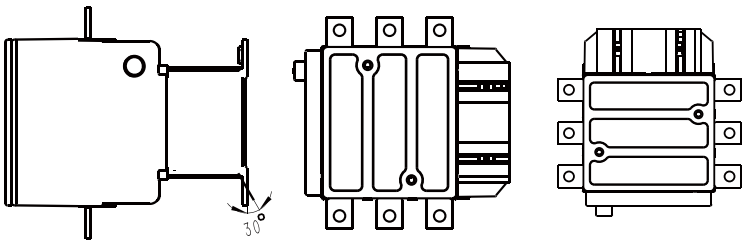	
外壳防护等级 Protection Degree			IP00	
抗冲击能力 Impact Resistance 1/2正弦波 Sine Wave =11ms	打开 Open	g	9	9
	闭合 Close	g	15	15
抗震能力 Seismic Performance	打开 Open	g	2	2
	闭合 Close	g	4	4
重量 Weight		kg	17.4	17.4
AC-1				
额定工作电流 Rated Operational Current (Ie)	≤104°F (≤40°C)	A	1000	1000
额定工作功率 Rated Operational Power (Pe)	380/415V	kW	600	600
	660/690V	kW	1000	1000
AC-3				
额定工作电流 Rated Operational Current (Ie)	380/400V	A	630	800
	660/690V	A	560	650
额定工作功率 Rated Operational Power (Pe)	220/240V	kW	200	250
	380/400V	kW	335	450
	415V	kW	375	450
	440V	kW	400	450
	500V	kW	400	450
	660/690V	kW	450	475
	1000V	kW	450	450
AC-4				
额定工作电流 Rated Operational Current (Ie)	230V	A	230	230
	380/400V	A	225	242
	660/690V	A	200	215
额定工作功率 Rated Operational Power (Pe)	230V	kW	75	75
	380/400V	kW	110	132
	660/690V	kW	185	200
	100V	kW	150	200
短时耐受电流 Short-Time Withstand Current ≤104°F (≤40°C)	10s	A	5050	5500
	30s	A	4600	4600
	1min	A	3600	3600
	3min	A	2600	2600
	10min	A	1700	1700

特性参数 CHARACTERISTIC PARAMETERS					
产品型号 Product Model				HC6-630	HC6-800
UL					
电机额定功率 Rated Power of Motor 50/60Hz	1P	110-120V	HP	/	/
		220-240V	HP	/	/
	3P	200-208V	HP	/	/
		220-240V	HP	250	300
		440-480V	HP	500	600
		550-600V	HP	600	700
控制回路特性 Control Circuit Characteristic					
控制回路电压 Control Circuit Voltage			V	AC:24/48/110/220/380/415V; DC:24/48/110/220V	
电压范围 Voltage Range		吸合 Pick-up		(85%-110%) Us	
		释放 Drop-out		AC: (20%-60%) Us; DC: (10%-60%) Us	
交流单线圈 AC Single Coil 50Hz	吸合功耗 Pick-up Power Consumption		VA	/	
	保持 Sealing Power Consumption		VA	/	
	吸合延时 Pick-up Delay		ms	/	
	释放延时 Drop-out Delay		ms	/	
交流单线圈 AC Double Coil 50/60Hz	吸合功耗 Pick-up Power Consumption		VA	1730	
	保持 Sealing Power Consumption		VA	25	
	吸合延时 Pick-up Delay		ms	40-80	
	释放延时 Drop-out Delay		ms	100-200	
直流线圈 DC Coil	吸合功耗 Pick-up Power Consumption		W	1920	
	保持 Sealing Power Consumption		W	12.5	
	吸合延时 Pick-up Delay		ms	60-70	
	释放延时 Drop-out Delay		ms	40-50	
接线能力 Connections					
主回路 Main Circuit	电缆 Cable		mm^2	60*5*2	
	扭矩 Tightening Torque		N·m	58	
控制回路 Control Circuit	软线 Flexible	1根 Piece	mm^2	1-2.5	
	硬线 Solid	1根 Piece	mm^2	1-4	
	硬线/绞合 Solid/Stranded		AWG	16-14	
	扭矩 Tightening Torque		N·m	1.2	

外形及安装尺寸 Ourline and Installations mm [inch]:

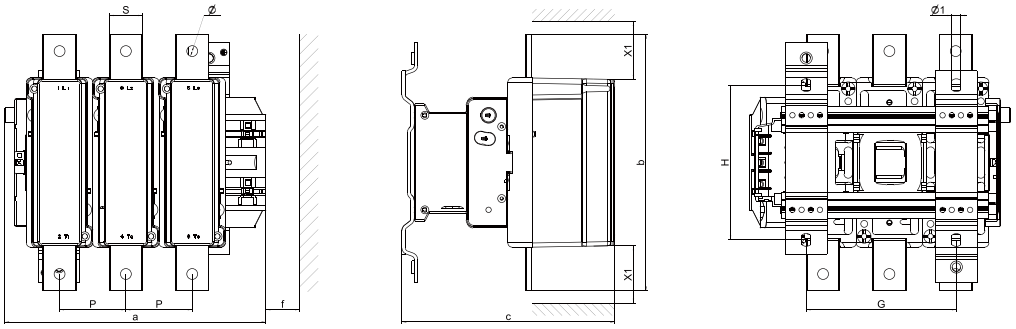

HC6	a	P	S	ϕ	f	b	c	G	H	ϕ1	X1	
											≤500V	>500V
630F	309[12.17]	80[3.15]	40[1.57]	M12	201[7.91]	304[11.97]	255[10.04]	180[7.09]	180[7.09]	10.5[0.41]	20[0.79]	30[1.18]
800F	309[12.17]	80[3.15]	40[1.57]	M12	201[7.91]	304[11.97]	255[10.04]	180[7.09]	180[7.09]	10.5[0.41]	20[0.79]	30[1.18]

f: 取出线圈的最小距离 Minimum distance to taking out coil;
X1: 最小电气间隙(飞弧距离) minimum electrical clearance (arcing distance).

安装使用及维护 Precautions for Use:

1.安装前首先检查实际使用场合是否符合接触器的用途与适用范围、技术参数及其正常工作条件和安装条件等。
Before installation, first check whether the actual use situation conforms to the purpose and scope of application, technical parameters, normal working conditions and installation conditions of the contactor.

2.安装时，将接触器的止动件向下拉，把接触器置于安装轨上，再将止动件向上推使接触器固定在安装轨上，不得松动、脱落。需要拆卸接触时，将止动件拉下便可轻松取下。
During installation, pull down the stopper of the contactor, place the contactor on the mounting rail, and then push the stopper upward to fix the contactor on the mounting rail without loosening or falling off. When the contact needs to be removed, the stopper can be easily removed by pulling it down.

3.接触器接线时应将导线伸入接线孔中，然后拧紧接线螺钉，使导线不得松动、拔出。裸露铜线头不能露在接线端外。
When the contactor is connected, the wire shall be inserted into the connection hole, and then the connection screw shall be tightened to prevent the wire from loosening and pulling out. The exposed copper wire head shall not be exposed outside the terminal.

4.接触器在接线时不得猛拧接线螺钉，在拧紧和拧松螺钉时所用螺丝刀应适当，避免使用气动工具打滑螺钉。
When connecting the contactor, it is not allowed to screw the connecting screw violently. When tightening and loosening the screw, the screwdriver shall be appropriate to avoid slipping the screw with pneumatic tools.

5.检查接线正确无误后，应在主触头不带电的情况下，先使线圈通电分合数次，检查产品动作是否可靠，然后才能投入使用。
After checking whether the wiring is correct, when the main contact is not charged, the coil shall be powered on and off for several times to check whether the product action is reliable, and then it can be put into use.

6.当接触器间、接触器与断路器间紧靠安装时，需安装间隔件以利于散热；当配电箱内温度超过+60°C时，接触器需要降容使用。
When contactors, contactors and circuit breakers are installed close to each other, spacers shall be installed to facilitate heat dissipation; When the temperature in the distribution box exceeds + 60°C, the contactor needs to be reduced in capacity.

7.接触器在使用期中，应定期检查接线螺钉的松紧情况，如出现松脱应及时将其拧紧；定期清除外壳表面的尘埃，保持外壳良好的绝缘性；在用中如出现较大的噪音或外壳绝缘失效等情况，应及时更换新的产品；按照产品工作频率和使用时间来计算，当产品的工作次数达到(或接近产品的使用寿命时，应及时更换新的产品。
During the service life of the contactor, the tightness of the connecting screw shall be checked regularly, and in case of looseness, it shall be tightened in time; Regularly remove the dust on the surface of the shell to maintain good insulation of the shell; In case of large noise or shell insulation failure during use, new products shall be replaced in time; According to the working frequency and service time of the product, when the working frequency of the product reaches (or approaches) the service life of the product, the new product shall be replaced in time.

8.接触器的保质储存期为自出厂之日（见产品合格证或生产批号）起24个月，储存温度为-25°C～+60°C，且不得受雨雪侵袭和阳光直射。产品存期的产品必须重新检查。如因储存不当或超过储存期未经检查就使用儿出现质量问题，按有关质量法规处理。
The shelf life of the contactor is 24 months from the date of delivery (see the product certificate or production batch number). The storage temperature is -25°C～+60°C, and it shall not be affected by rain and snow and direct sunlight. Products in the storage period must be rechecked. In case of quality problems caused by improper storage or use without inspection beyond the storage period, it shall be handled according to relevant quality regulations.